FRONT VIEW

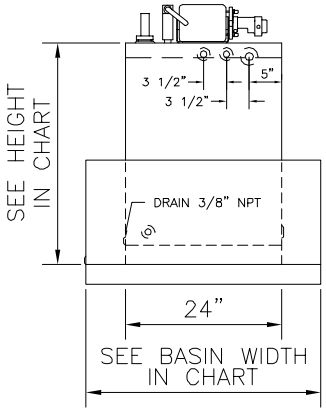

RIGHT SIDE VIEW

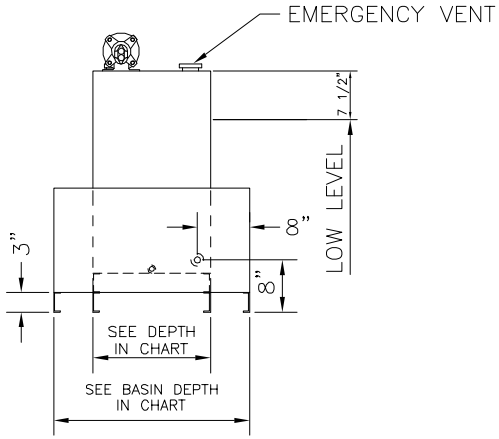

REAR VIEW

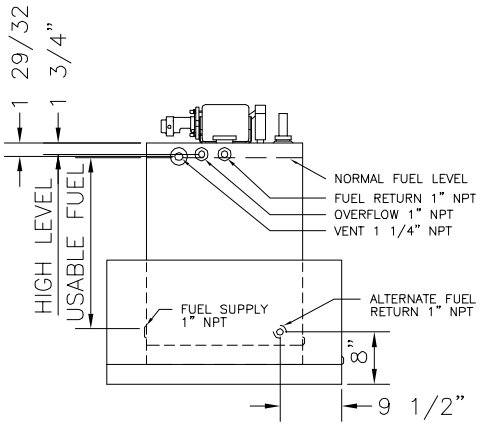

		MODEL					
		ET50	ET60	ET75	ET100		
CAPACITY	GAL	50	60	75	100		
	LIT	189	228	284	379		
BASIN WIDTH	IN	36	36	36	36		
	CM	91.4	91.4	91.4	91.4		
BASIN DEPTH	IN	30	30	30	36		
	CM	76.2	76.2	76.2	91.4		
TANK WIDTH	IN	24	24	24	24		
	CM	61	61	61	61		
TANK DEPTH	IN	18	18	18	24		
	CM	45.7	45.7	45.7	61		
TOTAL HEIGHT	IN	45	50	58	58		
	CM	114.3	127	147.3	147.3		
BASIN HEIGHT	IN	19	22.25	27	29.75		
	CM	48.3	54.5	68.6	75.6		
WEIGHT	LB	272	292	336	390		
	KG	123	133	152	177		
EMERGENCY VENT	IN	2	2	2	3		

UL LISTED
FILE MH 15297
WHEN SPECIFIED

REV	DATE	DESCRIPTION	BY

E & C A

SCALE NONE	APPROVED BY	DRAWN BY TMP
DATE 10-16-95		REVISED

ET50ULD, 60ULD, 75ULD, 100ULD

WITH RUPTURE BASIN

DRAWING NUMBER 02845