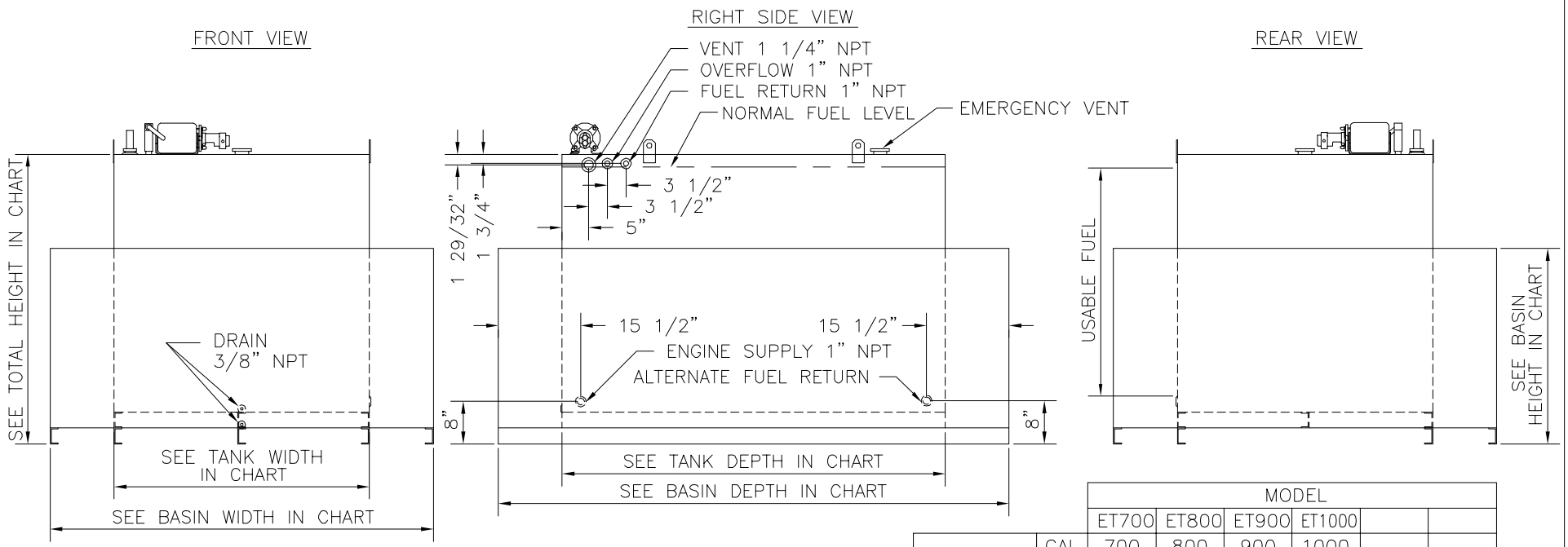

		MODEL					
		ET700	ET800	ET900	ET1000		
CAPACITY	GAL	700	800	900	1000		
	LIT	2660	3040	3420	3800		
BASIN WIDTH	IN	72	72	72	72		
	CM	183	183	183	183		
BASIN DEPTH	IN	100	110	121	132		
	CM	254	279.4	307	335		
TANK WIDTH	IN	48	48	48	48		
	CM	121.9	121.9	121.9	121.9		
TANK DEPTH	IN	76	86	97	108		
	CM	193	218.4	246.4	274.3		
TOTAL HEIGHT	IN	62.5	62.5	62.5	62.5		
	CM	159	159	159	159		
BASIN HEIGHT	IN	36.75	38	39	39.5		
	CM	93.3	96.5	99	100.3		
WEIGHT	LB	1510	1662	1827	1986		
	KG	686	755	830	903		
EMERGENCY VENT	IN	5	5	5	5		

UL LISTED
FILE MH 15297
WHEN SPECIFIED

REV	DATE	DESCRIPTION	BY

E & C A

SCALE NONE	APPROVED BY	DRAWN BY TMP
DATE 5-18-95		REVISED

ET700UL, 800ULD, 900ULD, 1000ULD

WITH RUPTURE BASIN

DRAWING NUMBER 02833