FRONT VIEW

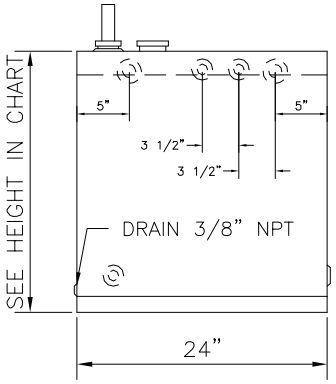

RIGHT SIDE VIEW

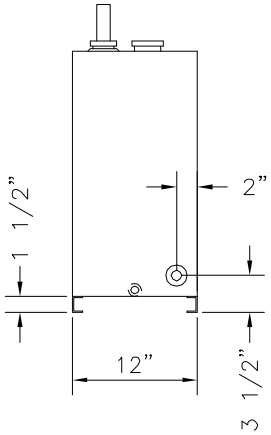

REAR VIEW

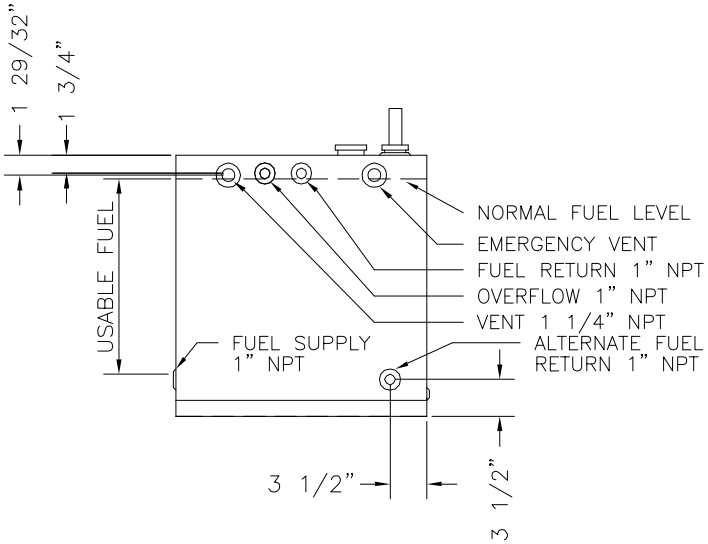

		MODEL			
		FT10	FT15	FT25	FT30
CAPACITY	GAL.	10	15	25	30
	LIT.	38	57	95	114
WIDTH	IN	24	24	24	24
	CM	61	61	61	61
HEIGHT	IN	14	17.5	25	27.5
	CM	35.6	44.5	63.5	69.9
DEPTH	IN	12	12	12	12
	CM	30.5	30.5	30.5	30.5
WEIGHT	LB	77	86	106	109
	KG	35	39	48	50
EMERGENCY VENT	IN	2	2	2	2

UL LISTED
FILE MH 15297
WHEN SPECIFIED

REV	DATE	DESCRIPTION	BY
3	4–04	ADDED 30 GALLON TANK	TMP
2	4–04	CORRECTED WEIGHTS	TMP
1	12–94	ADDED 15 GALLON TANK	TMP

E & C A

SCALE NONE | APPROVED BY | DRAWN BY TMP
DATE 2–14–91 | REVISED

MODEL FT10, 15, 25, 30ULD

UL DESIGNED TANKS

DRAWING NUMBER 02206